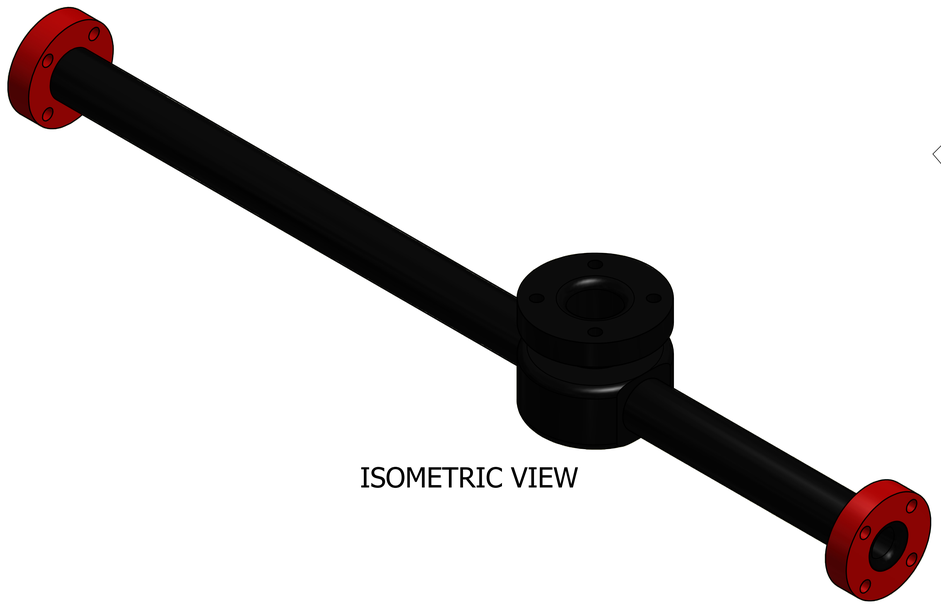

ISOMETRIC VIEW

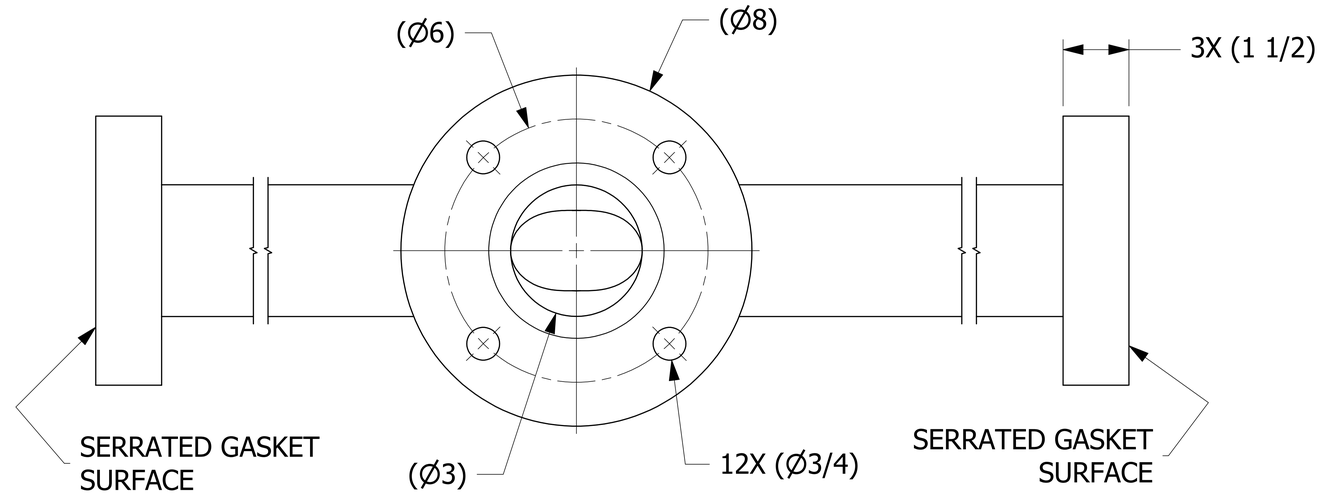

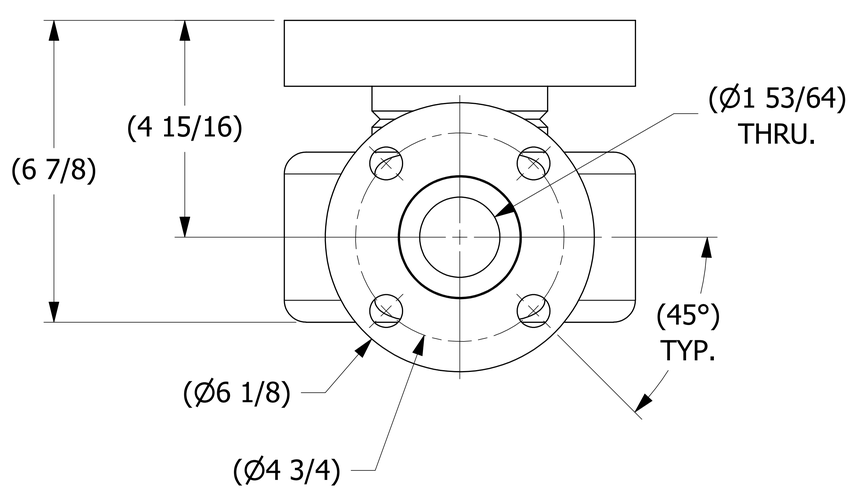

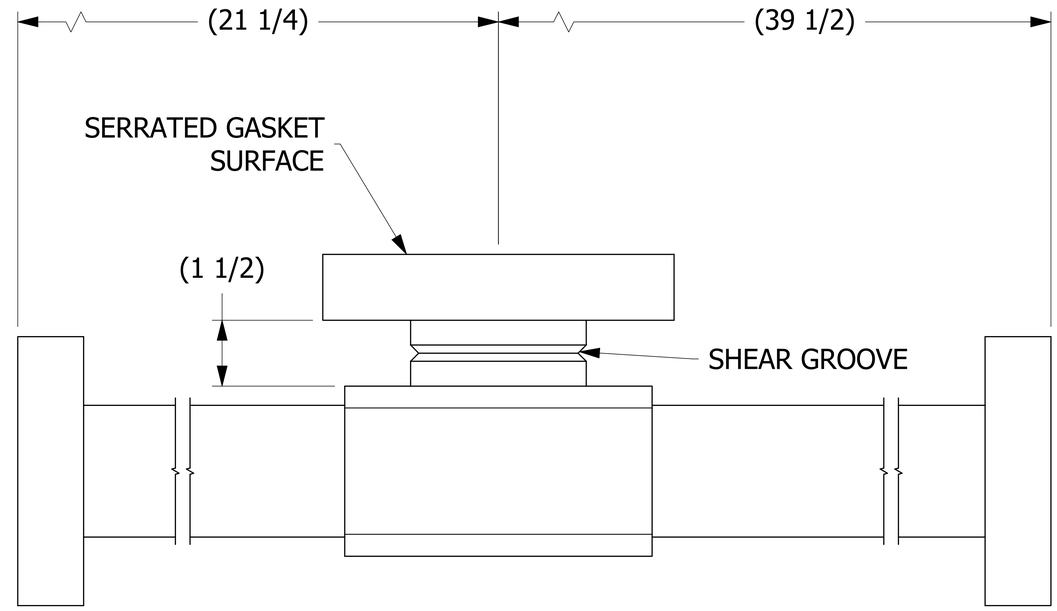

SALES DRAWING SALES DRAWING

SALES DRAWING SALES DRAWING

REV	BY	DATE	DESCRIPTION
A	JG	3-1-17	RELEASED FOR PRODUCTION

UNLESS OTHERWISE SPECIFIED
DIMENSIONAL TOLERANCES
FRACTIONAL: ±1/16
X.XX: ±.03
X.XXX: ±.015
ANGULAR: ±1°
DEBURR ALL SHARP EDGES.
ALL MACHINED SURFACES TO HAVE A 125 RMS FINISH UNLESS NOTED OTHERWISE.
THIRD ANGLE PROJECTION

DRAWN BY:	JG
CHECKED BY:	EJF
PROTOTYPE BY:	JG
PROTOTYPE DATE:	2/24/2017
APPROVED FOR PRODUCTION BY:	MJW
PRODUCTION DATE:	3/1/2017

SALCO PRODUCTS, INC.

PART NAME: PIPE TEE 3"X2"

MATERIAL: SALCO PE

PROJECT #: H170223 | SHEET #: 1 OF 1 | SCALE: 3:4

DRAWING #: E45084 | PART #: HS3X2PT4

THIS PRINT, PROPERTY OF SALCO PRODUCTS INC, CONTAINS PROPRIETARY INFORMATION AND MUST NOT BE COPIED, REPRODUCED, OR USED DETRIMENTALLY TO OUR INTEREST.